II WORKSHOP DE

ENERGIAS

OCEÂNICAS E FLUVIAIS

Pilot Project of a Small-Scale Hydrokinetic Turbine for Fluvial and Tidal Applications

Dr. Eric J. Limacher, Prof. Dr. Jerson R. P. Vaz

Eric Limacher

Jerson Vaz
(UFPA)

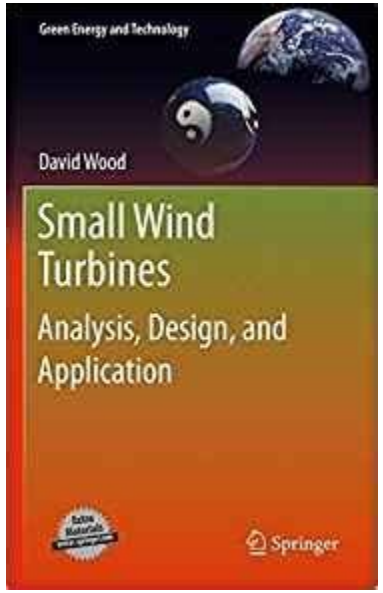

David Wood
(University of Calgary)

PROCAD Project Members and Institutions

Institutions

Universidade Federal do Pará (UFPA)
Universidade Federal do Maranhão (UFMA)
Universidade Federal do Rio de Janeiro (UFRJ)
University of Calgary (U of C)

Members

Jerson R. P. Vaz (UFPA)
Marcelo O. Silva (UFPA)
Wellington S. Fonseca (UFPA)
Osvaldo R. Saavedra (UFMA)
Daniel O. A. Cruz (UFRJ)
David H. Wood (U of C)
Eric J. Limacher (Canadian post-doc, NSERC)

Hydrokinetic Turbine Applications

https://www.motherearthnews.com/renewable-energy/other-renewables/micro-hydro-momentum-zwfz1210zrob

Fluvial

Marine (Tidal)

Target Specifications – Fluvial Application

	Units	Value
Rated power output	kW	0.50
Rated flow speed	m/s	1.0
Starting velocity	m/s	0.3
Maintenance interval	years	1
Lifetime of turbine	years	10
System cost	R$	17 000

Other requirements:

- transportation by pickup truck

- installed with minimal equipment (by hand if possible)

Original Proof-of-Concept Installation

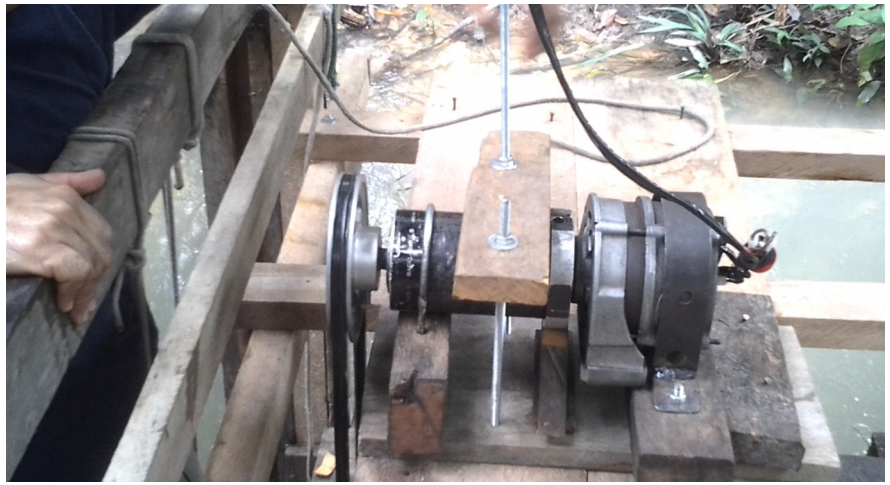

INSTITUTO NACIONAL DE CIÊNCIA E TECNOLOGIA
ENERGIAS OCEÂNICAS E FLUVIAIS

II WORKSHOP DE
ENERGIAS
OCEÂNICAS E FLUVIAIS

Parallel Research Paths at UFPA

Prototype Development

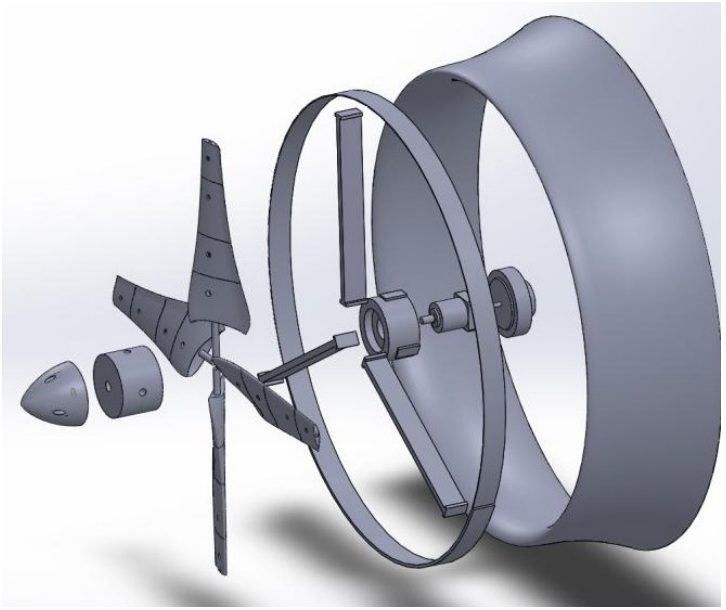

Improving Engineering Models

Energy Conversion and Management 87 (2014) 1116–1123

Contents lists available at ScienceDirect

Energy Conversion and Management

journal homepage: www.elsevier.com/locate/enconman

An extension of the Blade Element Momentum method applied to Diffuser Augmented Wind Turbines

Déborah Aline Tavares Dias do Rio Vaz [a], André Luiz Amarante Mesquita [b,*], Jerson Rogério Pinheiro Vaz [b], Claudio José Cavalcante Blanco [c], João Tavares Pinho [d]

[a] Federal University of Pará – Natural Resources Engineering Program, Av. Augusto Correa, N 1 – Belém, PA 66075-900, Brazil
[b] Federal University of Pará – Faculty of Mechanical Engineering, Av. Augusto Correa, N 1 – Belém, PA 66075-900, Brazil
[c] Federal University of Pará – Faculty of Sanitation and Environmental Engineering, Av. Augusto Correa, N 1 – Belém, PA 66075-900, Brazil
[d] Federal University of Pará – Faculty of Electrical Engineering, Av. Augusto Correa, N 1 – Belém, PA 66075-900, Brazil

To Diffuse, or not to Diffuse?

diffuser-augmented turbines

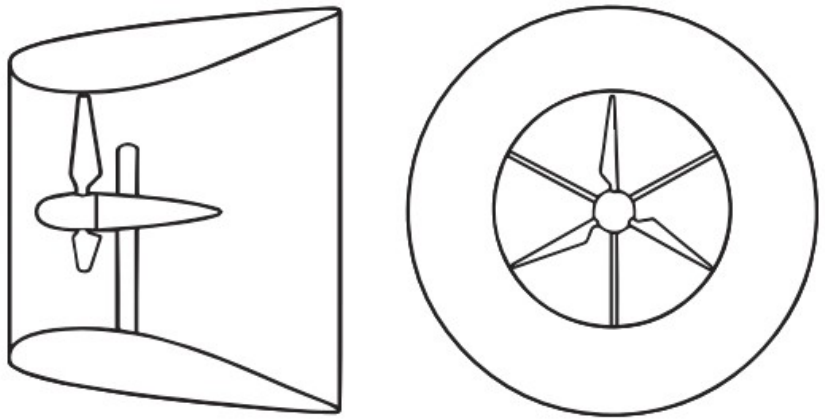

Bontempo & Manna (2016), *Energy*

bare turbines

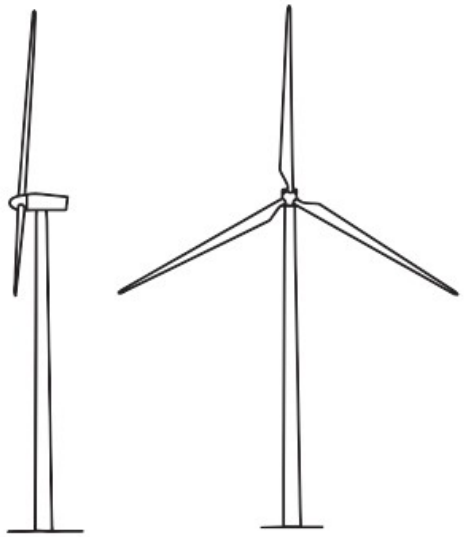

Diffusers act to augment the mass flow rate through the rotors.

Power augmentation is linearly proportional to mass flow rate augmentation.

Hansen & Sorensen (2000), *Wind Energy*
van Bussel (2007), *J. of Phys.*
Bontempo & Manna (2016), *Energy*

diffuser-augmented turbines

bare turbines

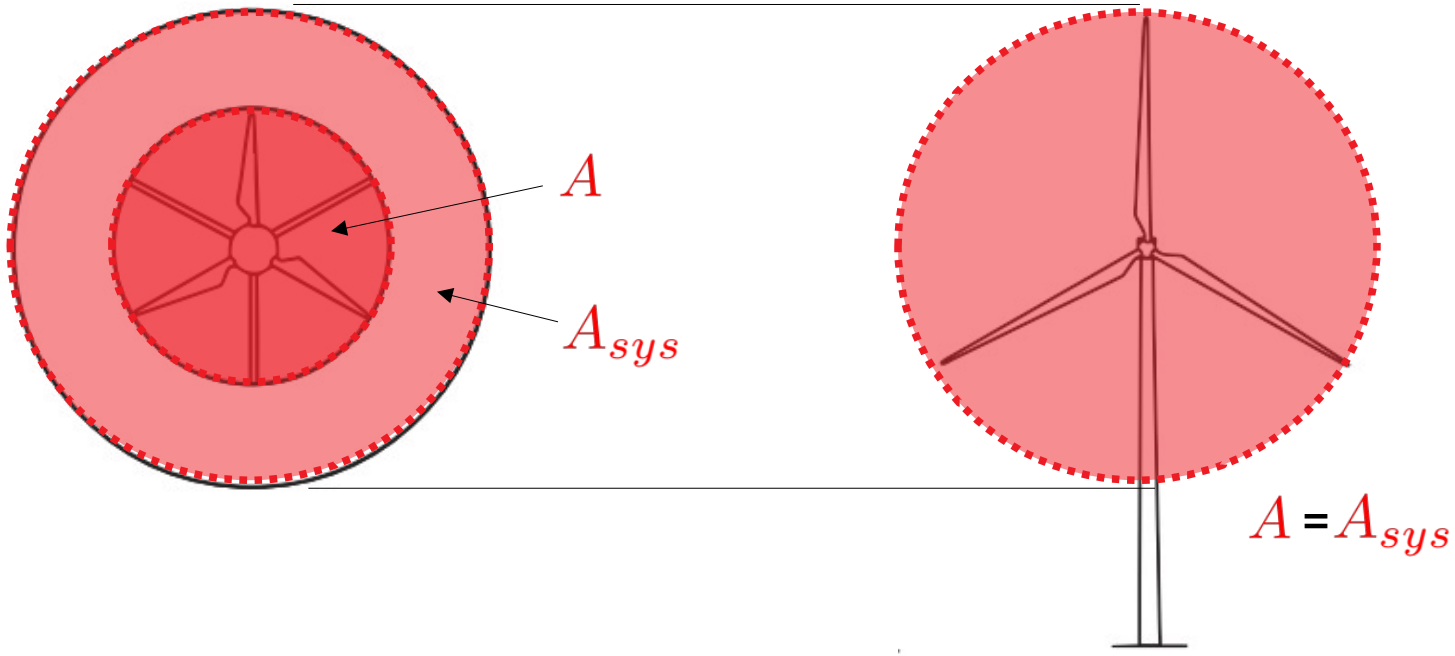

power coefficient definitions

$$C_p = \frac{P}{\frac{1}{2}\rho A V_\infty^3}$$

$$C_{p,sys} = \frac{P}{\frac{1}{2}\rho A_{sys} V_\infty^3}$$

Betz limit (bare turbine)

$$C_p \leq \frac{16}{27} \approx 59.3\%$$

diffuser-augmented turbines

bare turbines

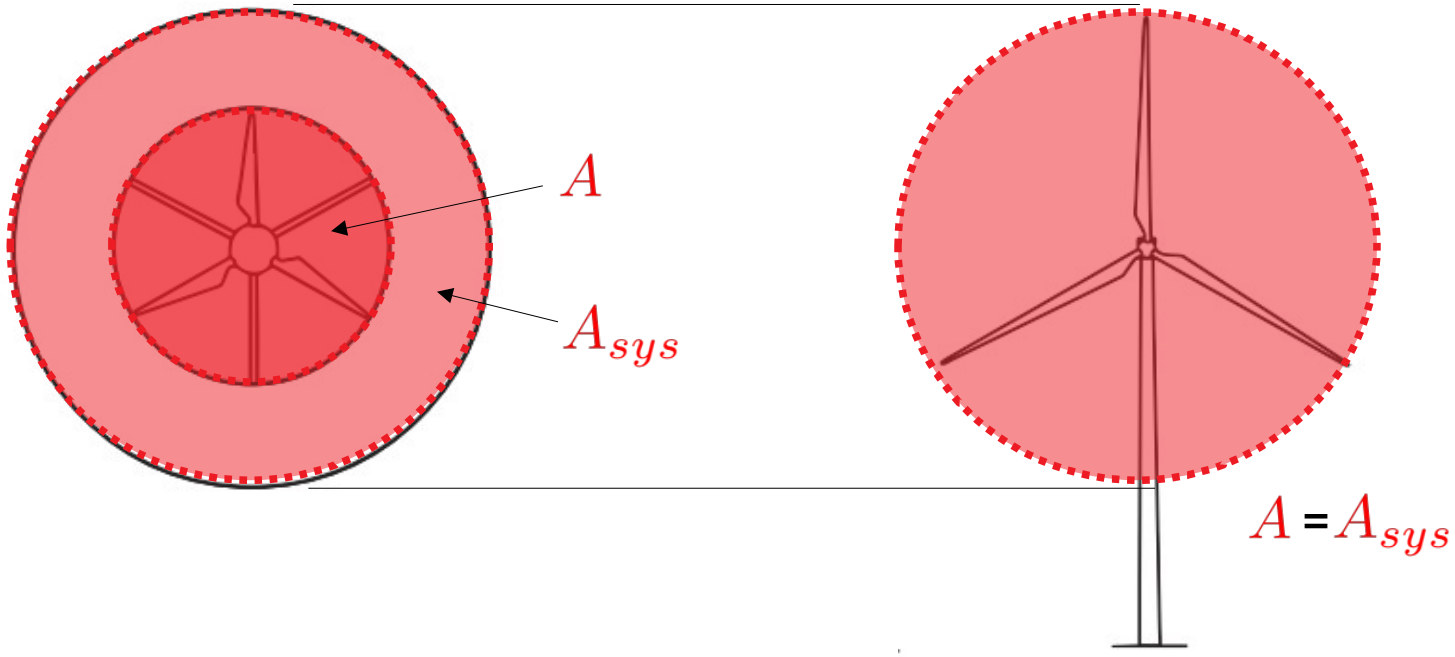

power coefficient definitions

$$C_p = \frac{P}{\frac{1}{2}\rho A V_\infty^3}$$

$$C_{p,sys} = \frac{P}{\frac{1}{2}\rho A_{sys} V_\infty^3}$$

Performance limit (general)

$$C_{p,sys} \leq \frac{16}{27} \approx 59.3\%$$

Jamieson (2008), *Wind Energy*
van Bussel (2007), *J. of Physics*

Benefits of diffusers

So, diffusers do not increase available resource, but they allow for...

- greater rotational velocity
  (reduce gearbox ratio or eliminate gearbox altogether)

- reduced starting velocity
  (greater total energy extraction)

- cost reduction?
  (possibly)

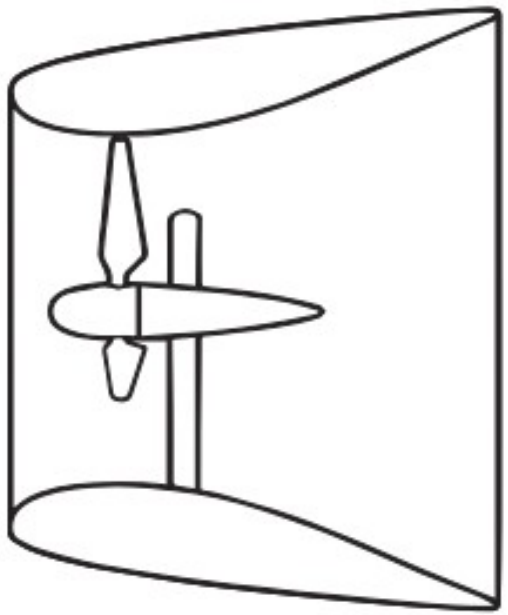

airfoil cross-section diffuser

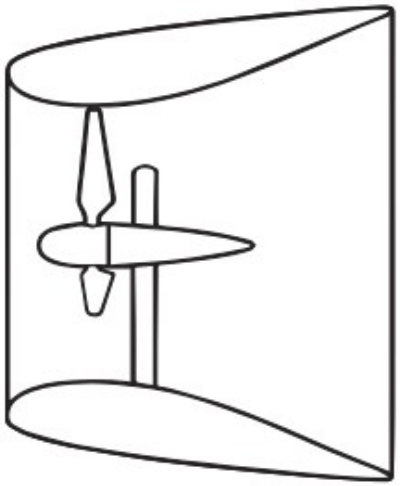

Bontempo & Manna (2016), *Energy*

flanged diffuser

Silva *et al* (2018),
Energy Conv. Mgmt

flanged conical diffuser

(case 0)

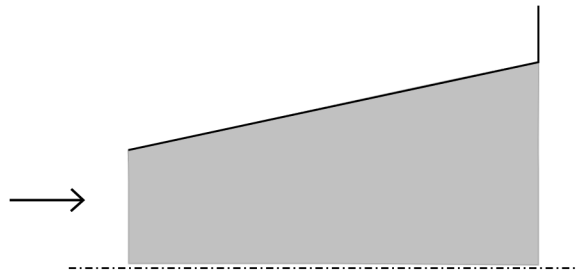

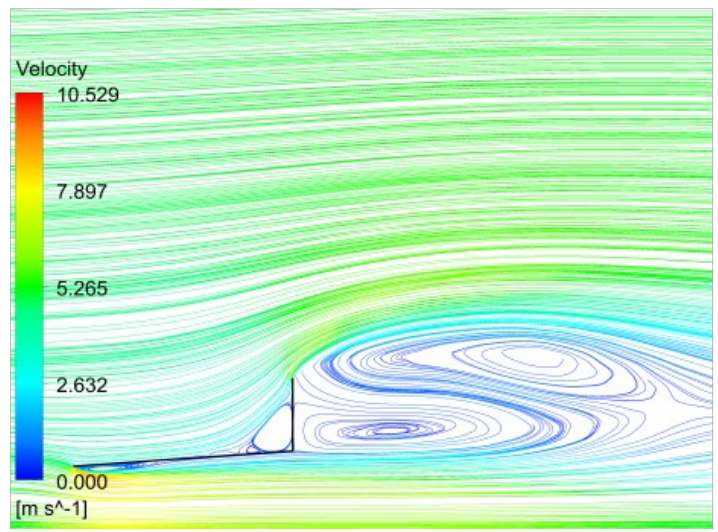

flanged conical diffuser

(case 0)

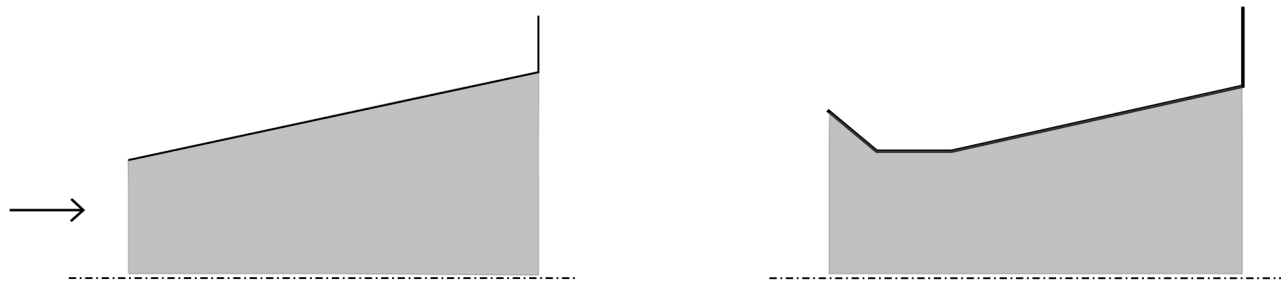

modified flanged diffuser

(case 1)

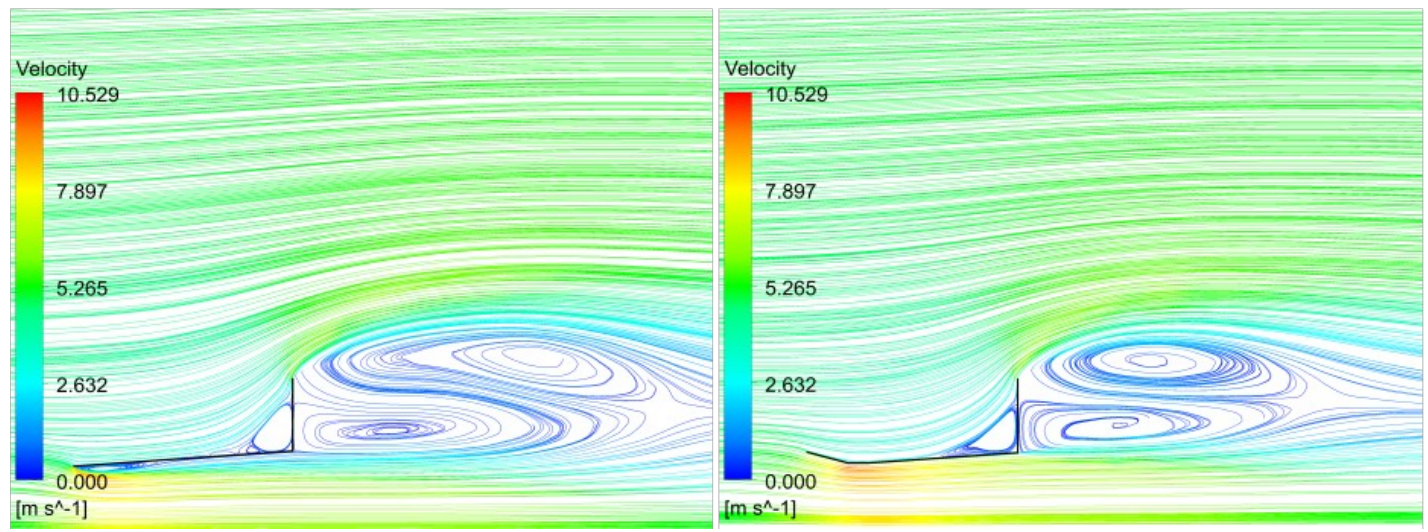

flanged conical diffuser

(case 0)

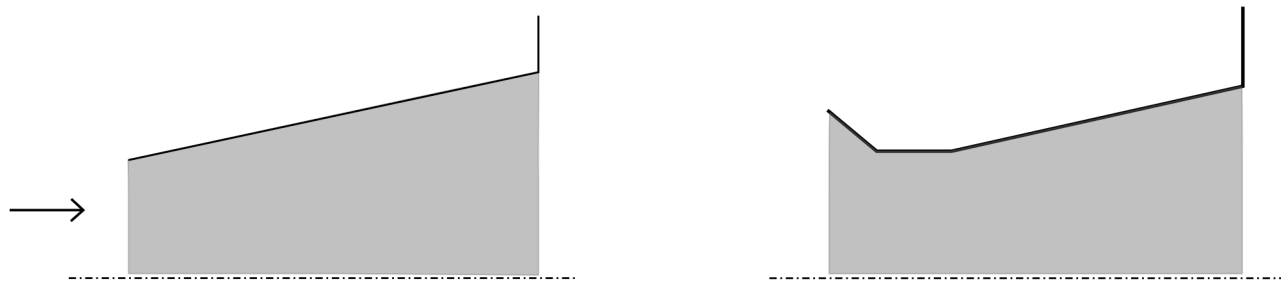

modified flanged diffuser

(case 1)

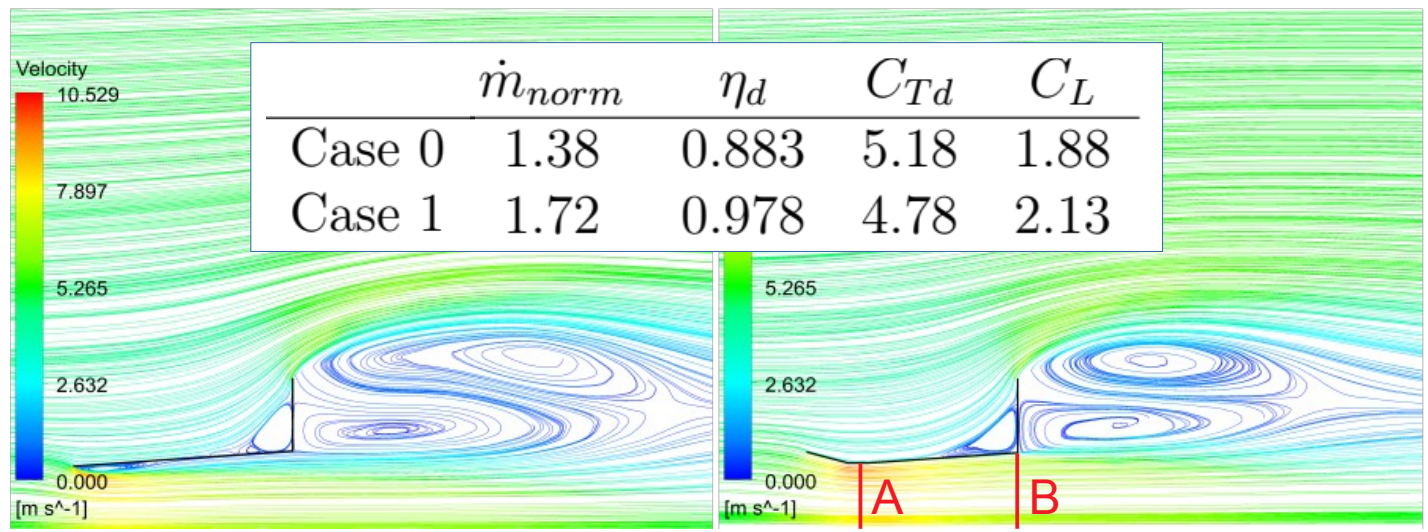

	$\dot{m}_{norm}$	η_d	C_{Td}	C_L
Case 0	1.38	0.883	5.18	1.88
Case 1	1.72	0.978	4.78	2.13

$$\dot{m}_{norm} = \frac{\dot{m}}{\rho A V_\infty}$$

$$\eta_d = \frac{p_B - p_A}{\frac{1}{2}(V_A^2 - V_B^2)}$$

INSTITUTO NACIONAL DE CIÊNCIA E TECNOLOGIA
ENERGIAS OCEÂNICAS E FLUVIAIS

II WORKSHOP DE
ENERGIAS
OCEÂNICAS E FLUVIAIS

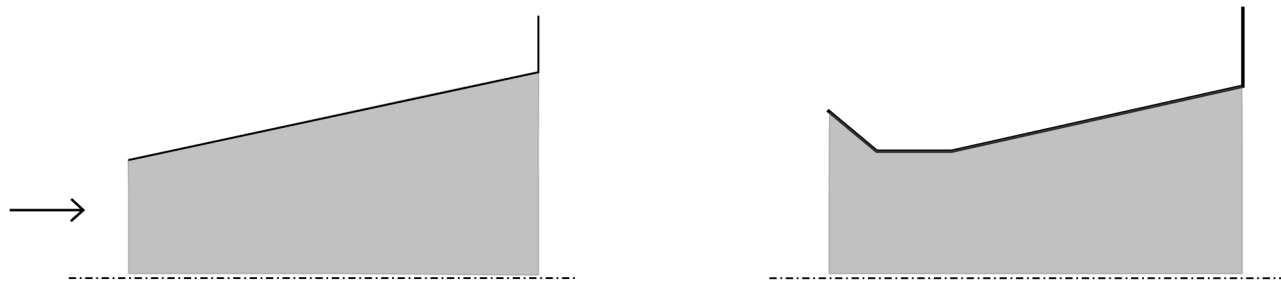

Maximization of sectional lift as a guiding principle in the design of flanged diffusers for wind turbines

Pedro O. C. da Silva[b,*], Pedro E. S. Barbosa[b], Eric J. Limacher[a], Jerson R. P. Vaz[a]

[a] *Graduate Program in Mechanical Engineering, Institute of Technology, Federal University of Pará - Av. Augusto Correa, N 1 - Belém, PA, 66075-900, Brazil*

[b] *Faculty of Mechanical Engineering, Institute of Technology, Federal University of Pará - Av. Augusto Correa, N 1 - Belém, PA, 66075-900, Brazil*

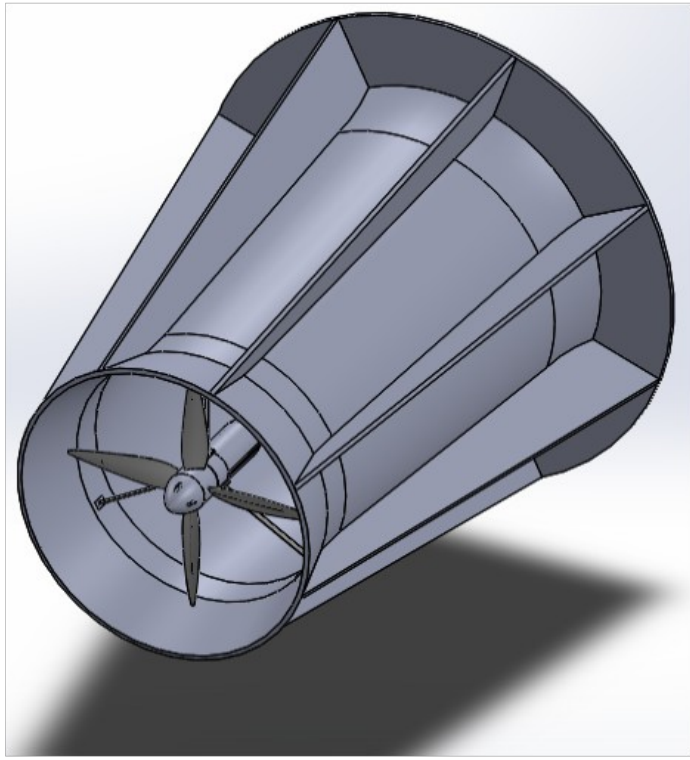

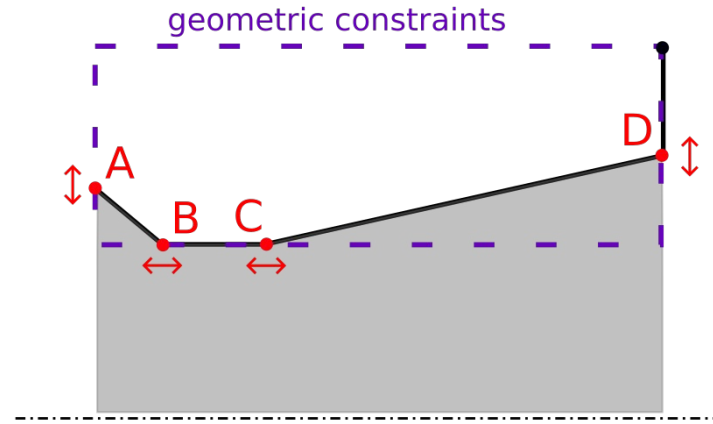

Optimization:

Degrees of Freedom: 4

Objectives: 2

- maximize mass flow rate
- minimize thrust

Blade-element momentum (BEM) theory

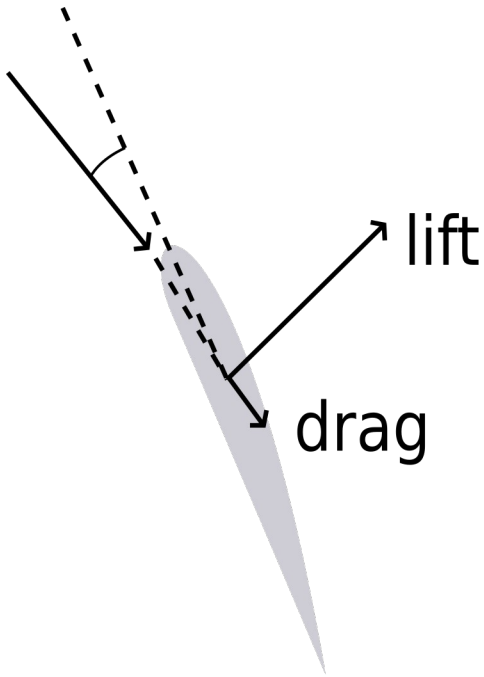

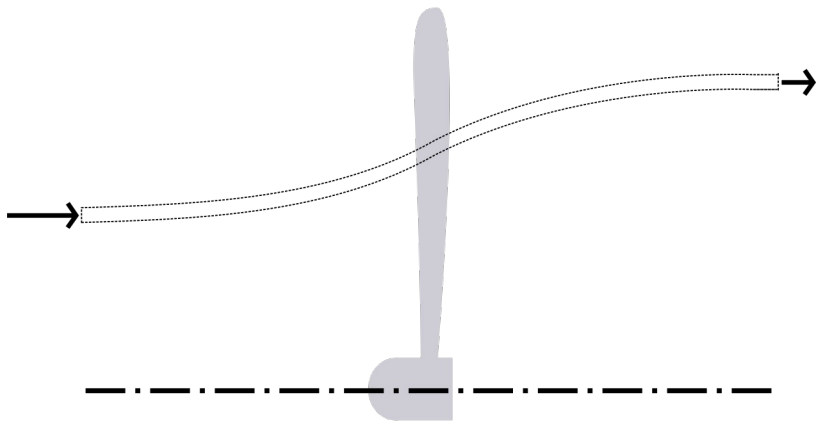

Blade-element momentum (BEM) theory

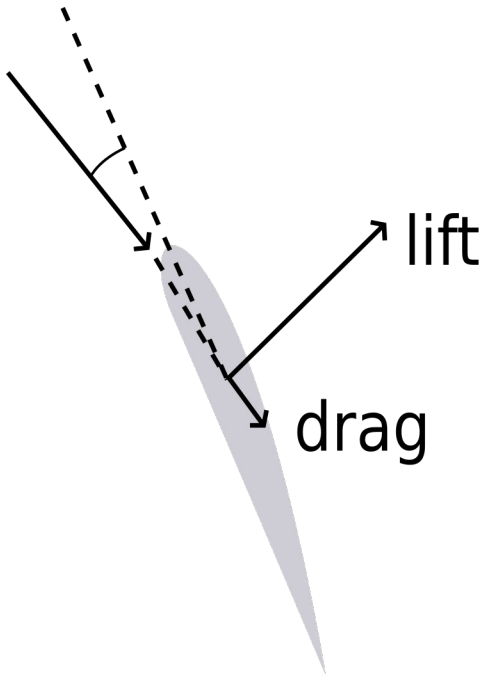

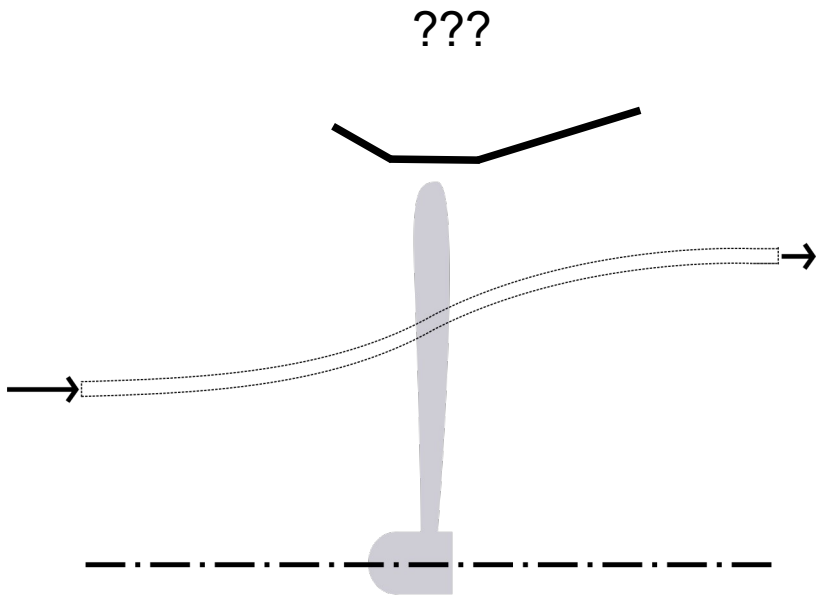

How do we account for the presence of the diffuser?

Methods of modifying BEM

speed-up ratio

Jamieson (2008)
Wind Energy
do Rio Vaz *et al* (2014)
Energy Conv & Mgmt

diffuser thrust

Vaz & Wood (2018),
Renewable Energy

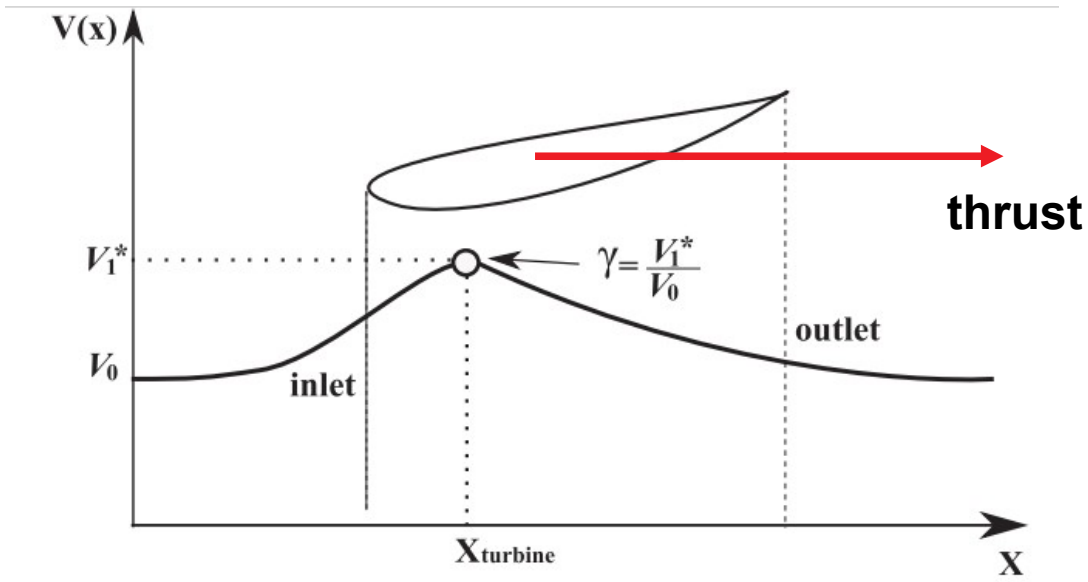

Rio Vaz et al (2014)
Energy Conv & Mgmt

How do we account for the presence of the diffuser?

Methods of modifying BEM

speed-up ratio

Jamieson (2008)
Wind Energy

do Rio Vaz *et al* (2014)
Energy Conv & Mgmt

diffuser thrust

Vaz & Wood (2018),
Renewable Energy

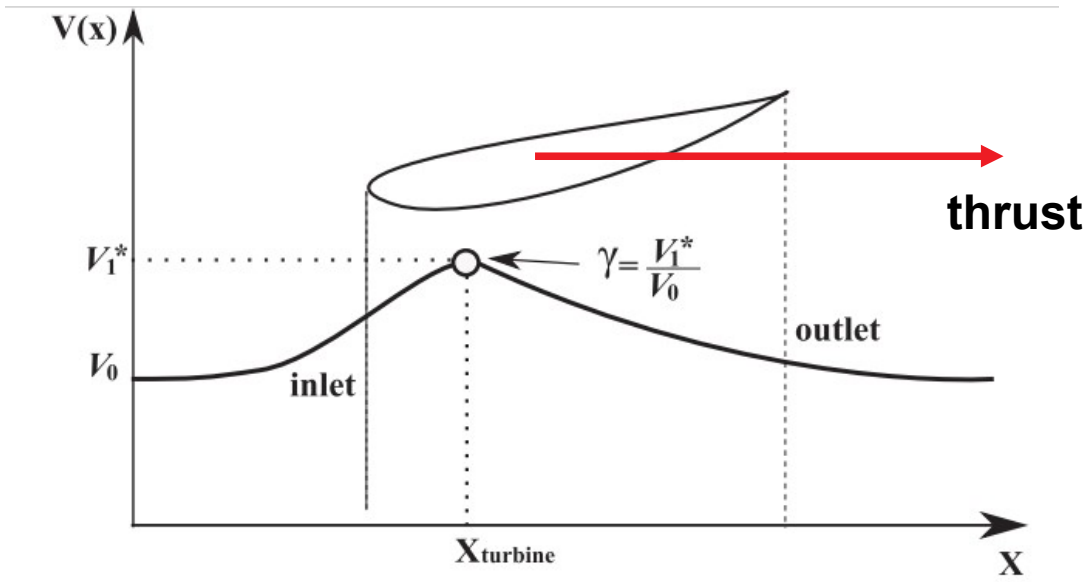

Rio Vaz et al (2014)
Energy Conv & Mgmt

How do we account for the presence of the diffuser?

BEM for diffuser-augmented turbines

Work by Prof. Jerson and collaborators:

Article	Notes
do Rio Vaz *et al* (2014), *Energy Conv. & Mgmt*	Derivation of BEM equations to evaluate performance
Vaz & Wood (2016), *Energy Conv. & Mgmt*	Blade optimization based on work above.
Vaz & Wood (2018), *Renewable Energy*	Including the effects of diffuser thrust and efficiency into the analysis
Currently in progress...	Revisit CV analysis to harmonize thrust and speed-up ratio approaches

Empirical data needed to implement

a) blade optimization (do Rio Vaz *et al,* 2014), and
b) rotor performance evaluation (Vaz & Wood, 2016)

airfoil data

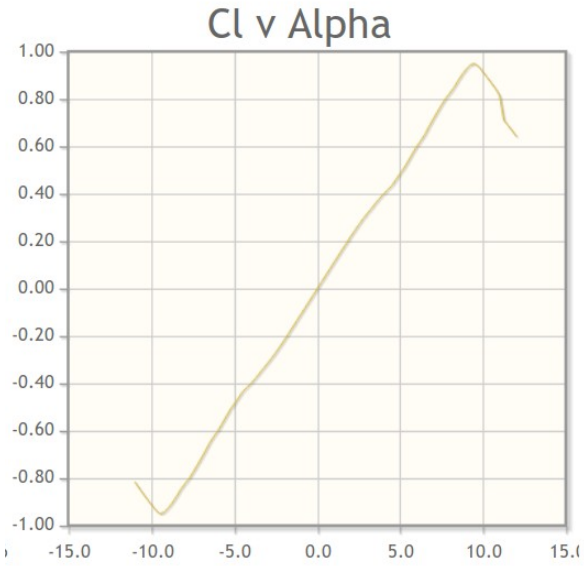

emtpy diffuser velocity data

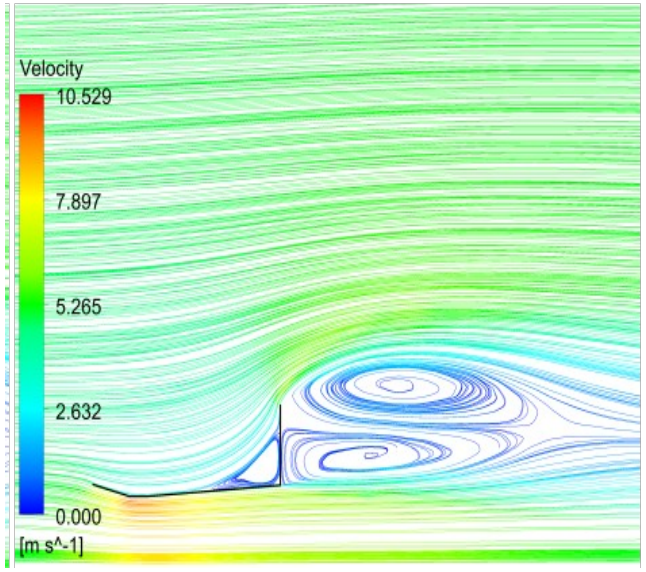

$$\gamma = \frac{V(r)}{V_\infty}$$

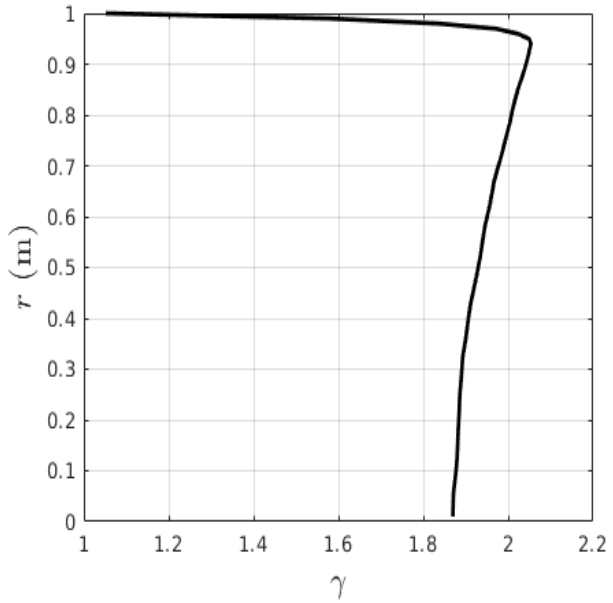

Current fluvial turbine design

Rated velocity: 1 m/s

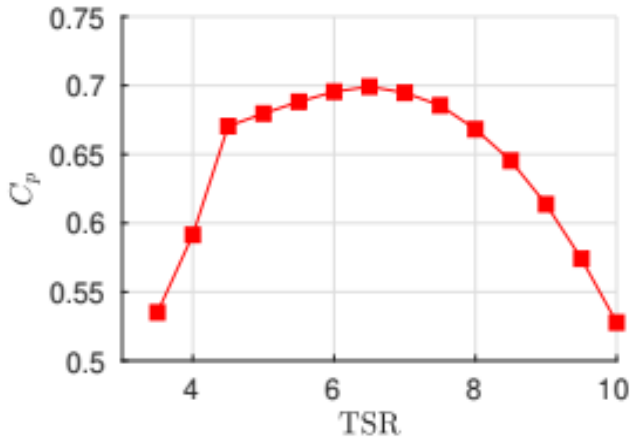

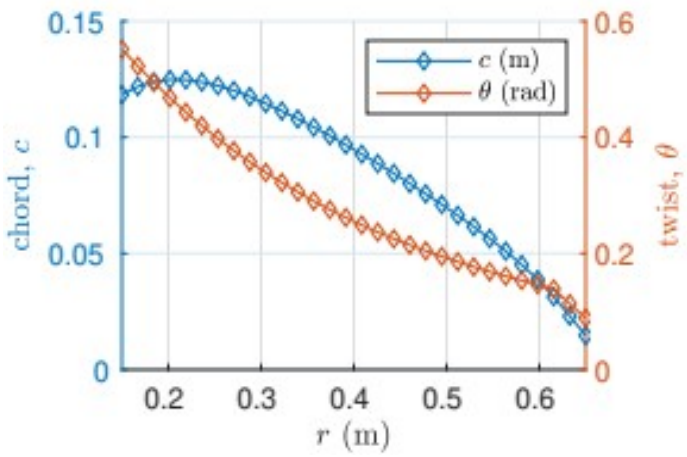

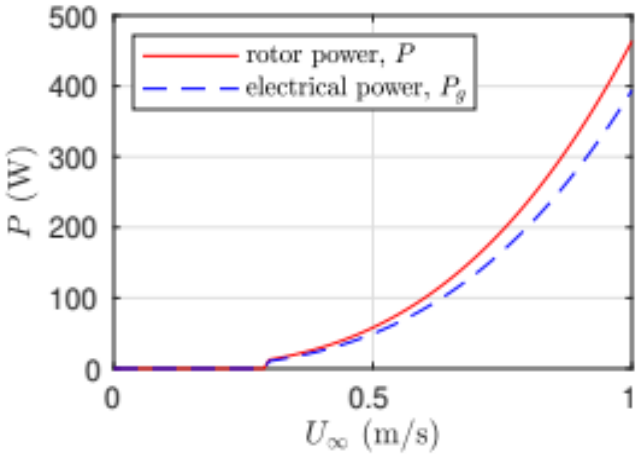

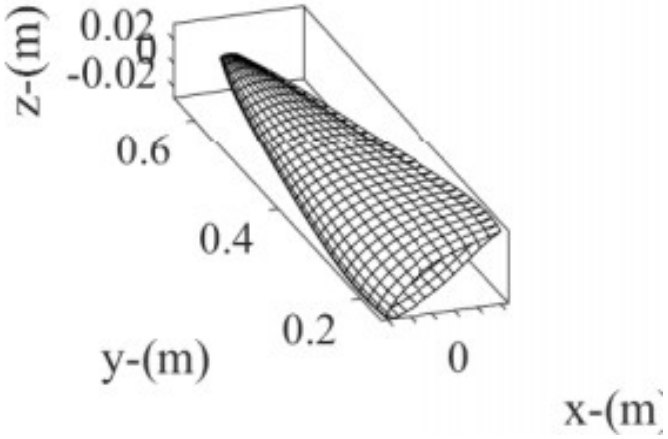

Total length: 2.4m
Outer diameter: 2.7m
Rotor diameter: 1.3m

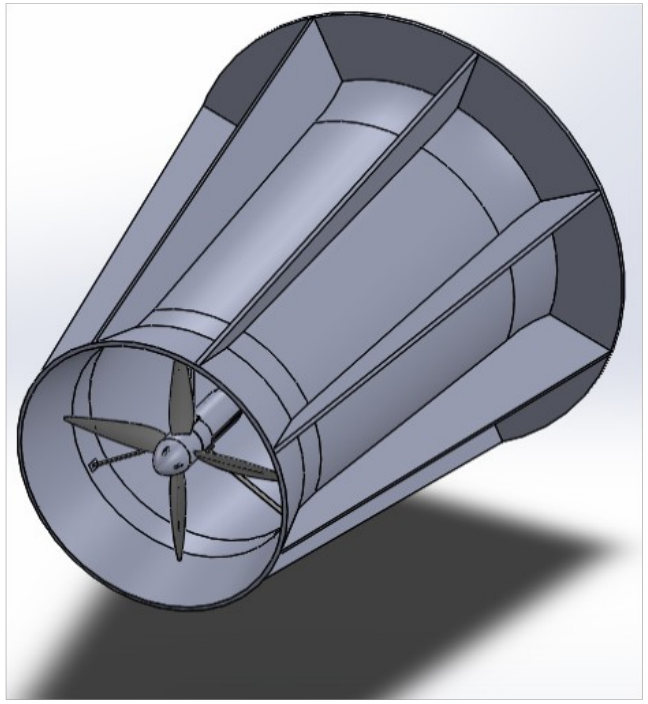

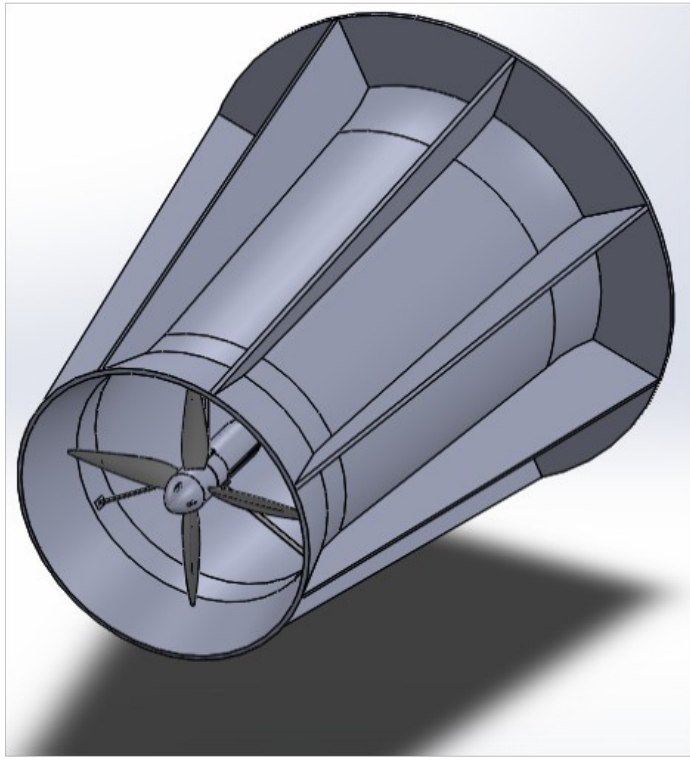

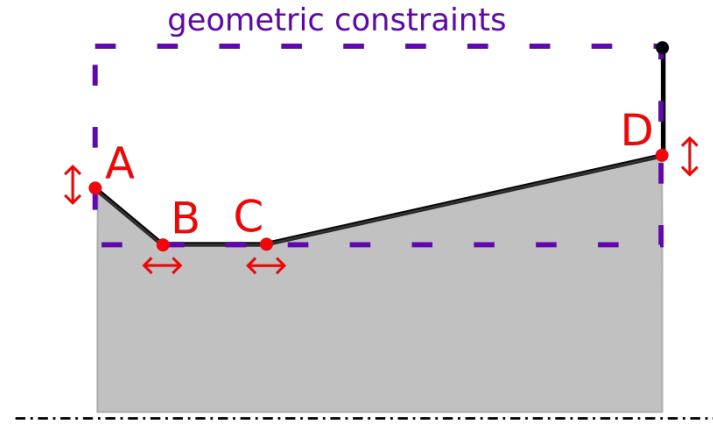

Optimization:

Degrees of Freedom: 4

Objectives: 2

- maximize mass flow rate
- minimize thrust

INSTITUTO NACIONAL DE CIÊNCIA E TECNOLOGIA
ENERGIAS OCEÂNICAS E FLUVIAIS

II WORKSHOP DE
ENERGIAS
OCEÂNICAS E FLUVIAIS

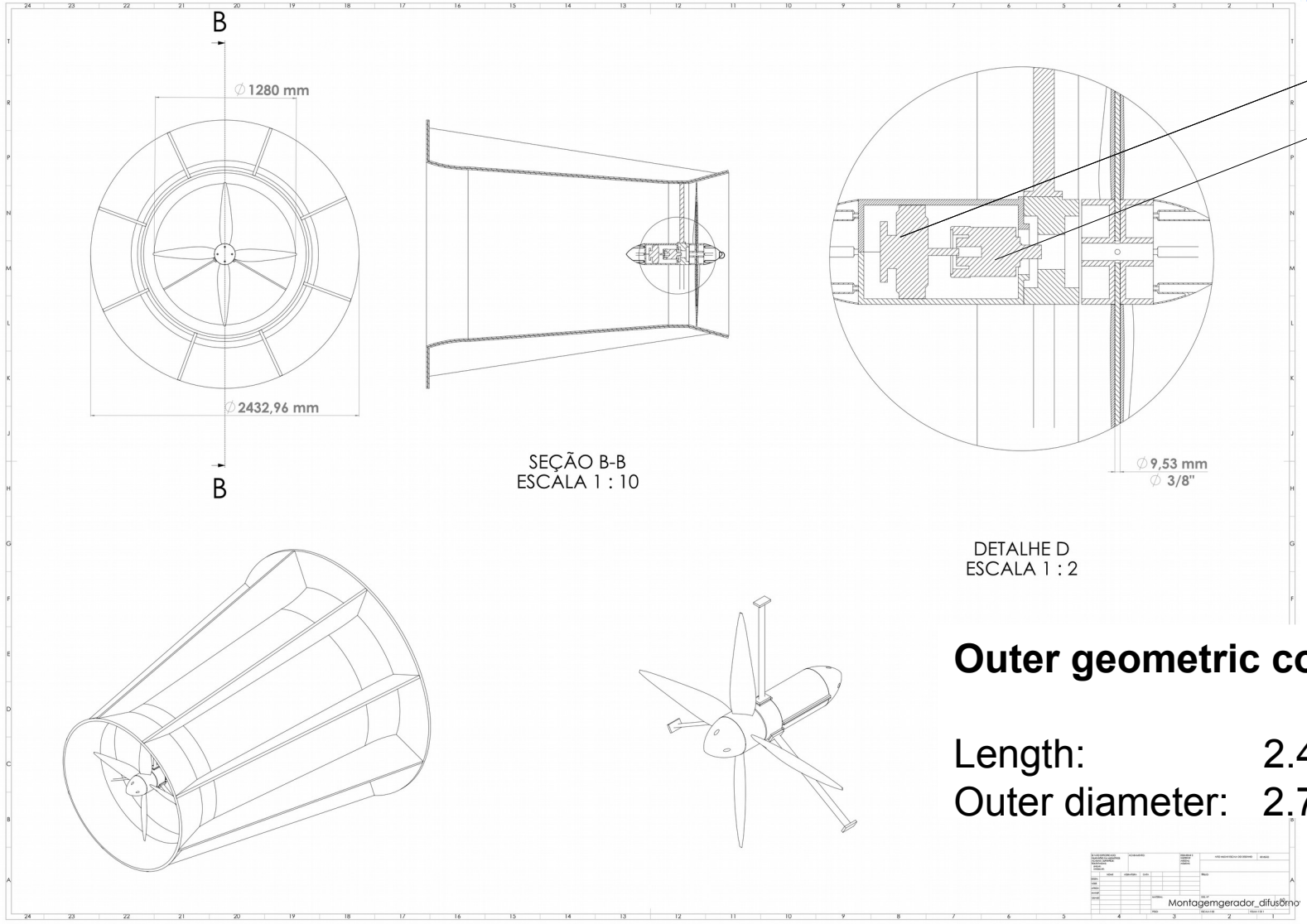

generator

gearbox

Outer geometric constraints:

Length: 2.4m
Outer diameter: 2.7m

Key challenges are due to submersion of the drivetrain

Sealing required at rotating-stationary interface

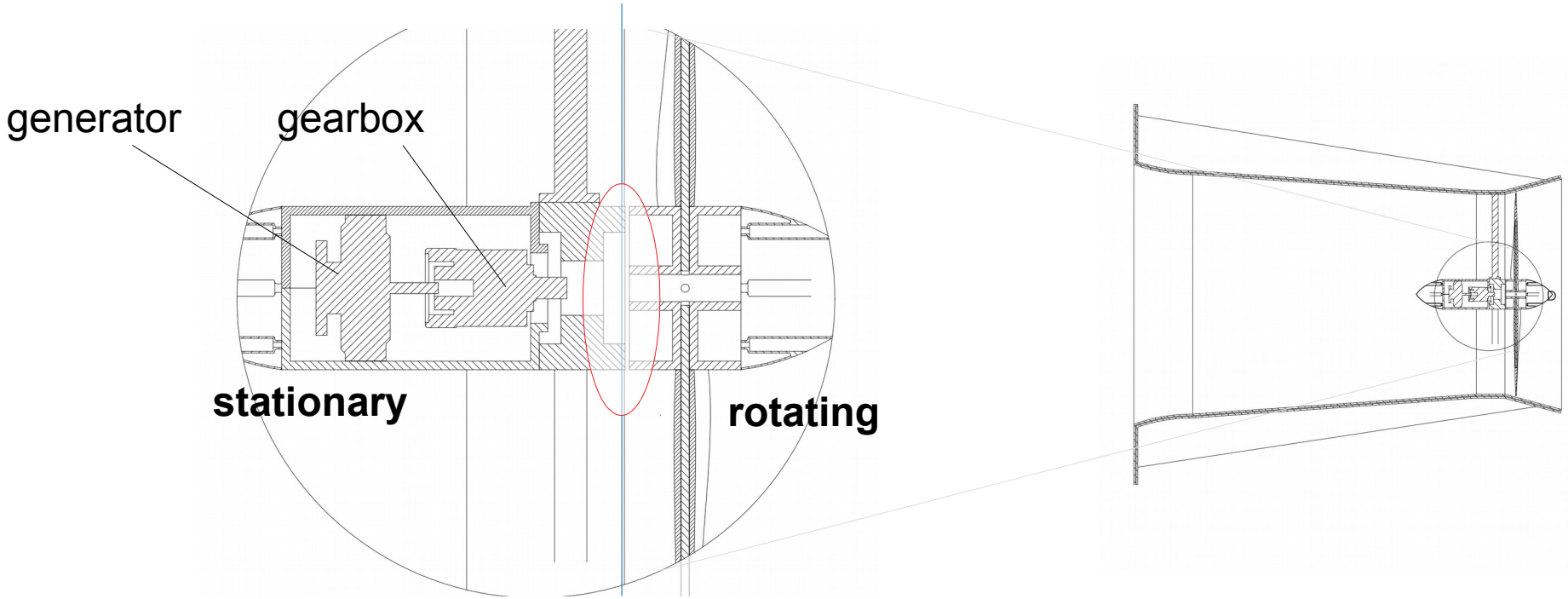

Key challenges are due to submersion of the drivetrain

Sealing required at rotating-stationary interface

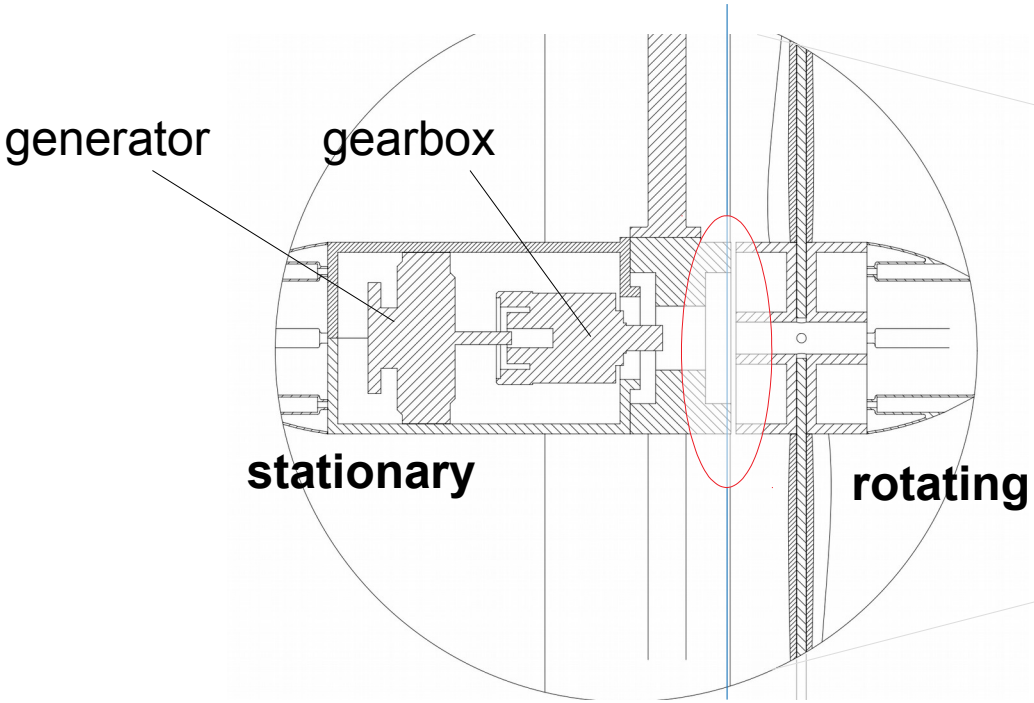

https://www.motherearthnews.com/renewable-energy/other-renewables/micro-hydro-momentum-zwfz1210zrob

Progress Summary for Fluvial Design

Completed Tasks

- selection of target operating conditions
- conceptual system design
- aerodynamic design of rotor blades
- mechanical design of rotor blades
- preliminary performance estimates

Tasks Underway

- fabrication of composite rotor blades
- generator selection
- detailed nacelle design
- detailed diffuser design

Outstanding Tasks

- complete documentation of detailed design
- procurement of drivetrain components
- assembly and field installation of completed turbine prototype

Tidal turbine concept -- 30kW

https://www.youtube.com/watch?v=u5tzolvmK4s&feature=youtu.be

Projected concept for 30kW Marine (Tidal) System

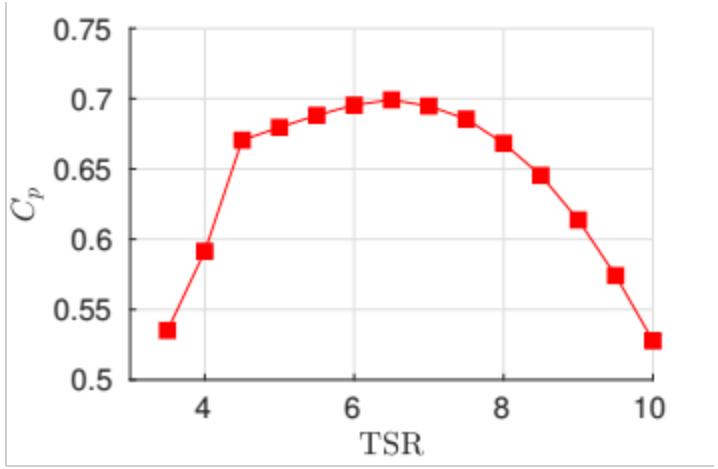

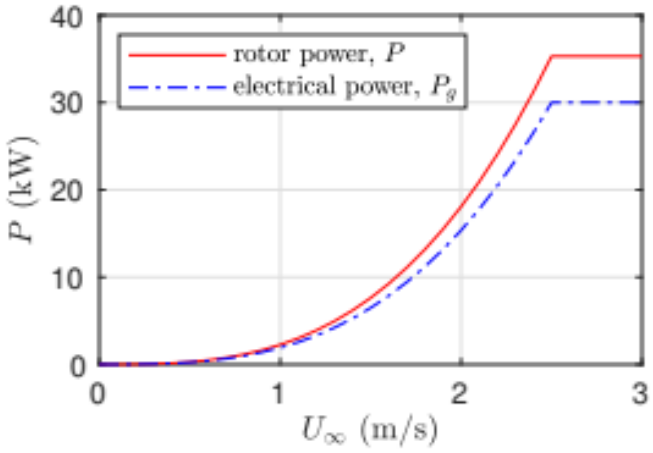

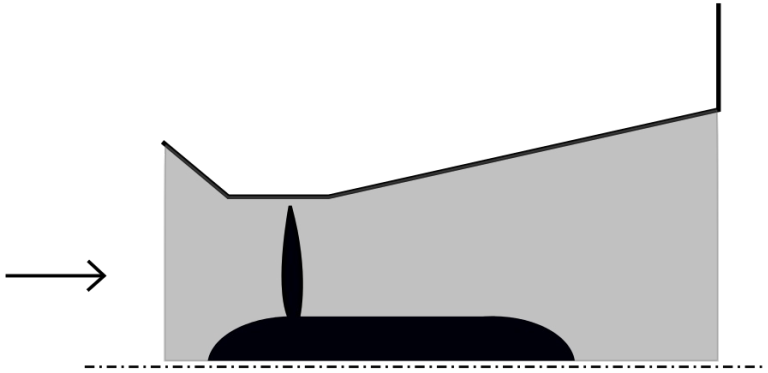

Scaled-up from fluvial design:

Rated power: 30kW
Rated velocity: 2.5m/s
Gen. Efficiency: 85%

Length: 6.7m
Outer diameter: 6.0m
Rotor diameter: 2.9m

Thank you!